Product Manual
-300W Water Pump

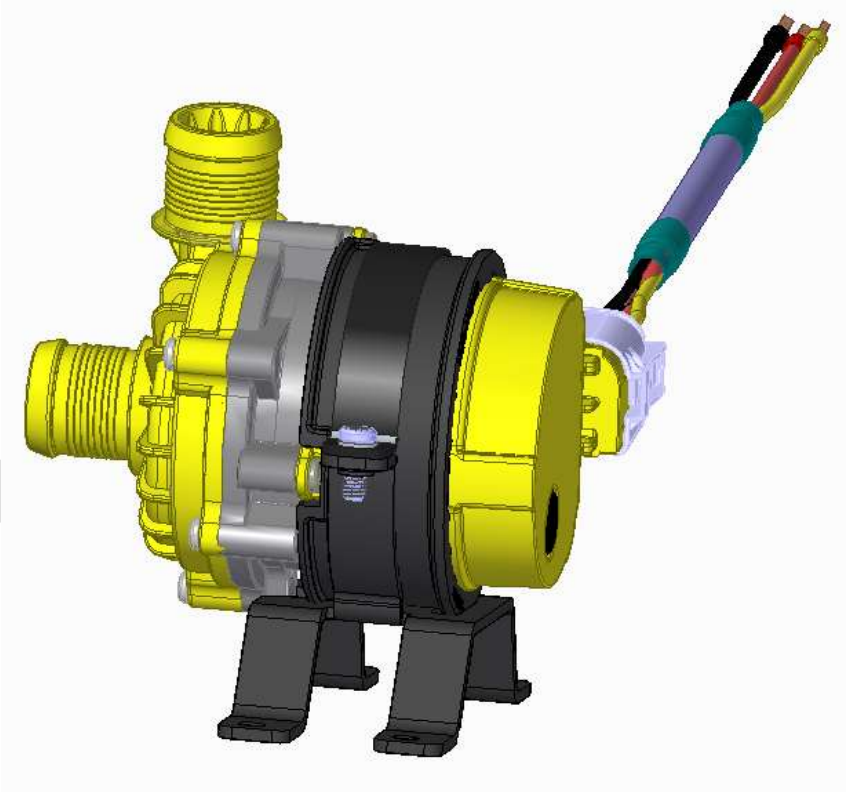

Copyright Johnson Electric Confidential

03/04/2025	0.1	Initial version	Duncan Cheng	
DATE	**Version**	**REVISION RECORD**	**Author**	**Remark**

Confidentiality Notice

This document is confidential and contains proprietary information and intellectual property of Jonson Electric. Neither this document nor any of the information contained herein may be reproduced or disclosed without the written permission of Johnson Electric

Contents

1 Introduction 3
2 Structure and Performance 3
2.1 Mechanical Structure 3
2.2 eModule Parameters 4
2.3 eModule Performance 5
3 eModule Installation Interface 6
3.1 Mechanical Connection 6
3.2 Electrical Connection 7
4 Product Specification 7
4.1 Electrical Parameters 7
4.2 Software Specification 8
4.2.1 Speed Control 8
4.2.2 Derating mode 9
4.2.3 Error Report 9
4.3 Control Interface 10
5 Validation Items 11
5.1 Performance Test 11
5.2 Structure and Leak test 11
5.3 Durability Test 11
5.4 Mechanical Test 11
5.5 Environmental Test 11
5.6 EMC and Safty Test 12
5.7 Electrical Related Test 12

Draft

Copyright Johnson Electric Confidential

Confidentiality Notice

This document is confidential and contains proprietary information and intellectual property of Jonson Electric. Neither this document nor any of the information contained herein may be reproduced or disclosed without the written permission of Johnson Electric

1 Introduction

This pump (eModule) platform is a centrifugal pump and developed for coolant cooling applications. It includes a pump, a brushless DC motor and an intelligent motor controller.

2 Structure and Performance

2.1 Mechanical Structure

The eModule (contains pump, motor and controller) axial length is 150.5mm. The total height is 149 mm as below picture shown.

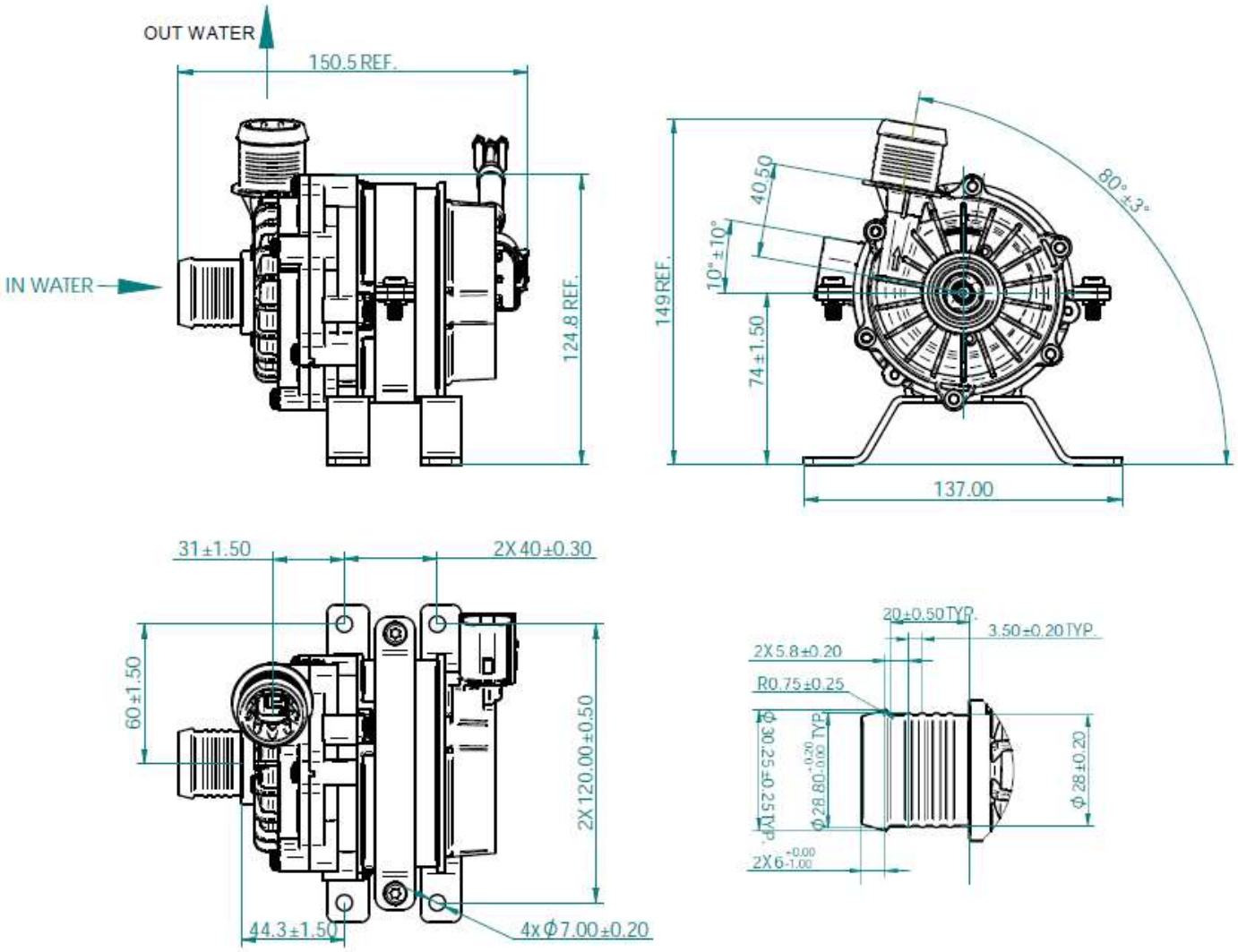

Copyright Johnson Electric Confidential

Confidentiality Notice

This document is confidential and contains proprietary information and intellectual property of Johnson Electric. Neither this document nor any of the information contained herein may be reproduced or disclosed without the written permission of Johnson Electric

The pump rotating direction is shown as below arrow:

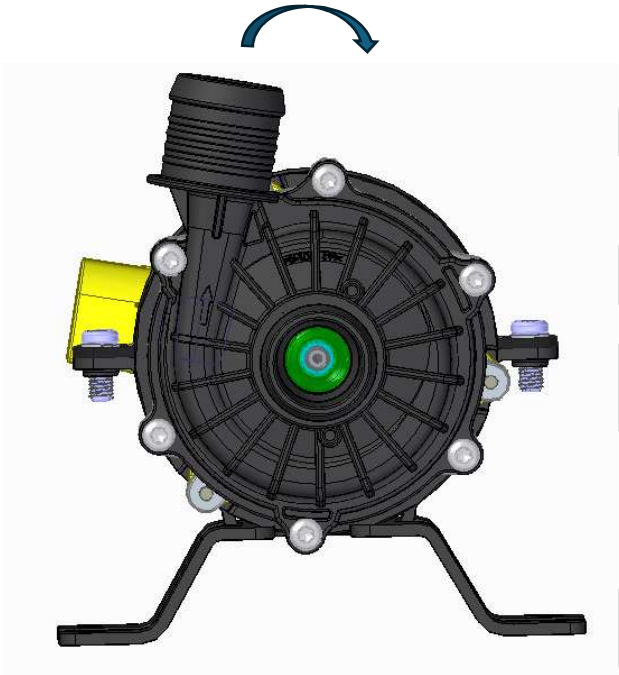

2.2 eModule Parameters

Voltage Range	9V~16V DC
Rated Voltage	12V
Pump Type	Centrifugal
Motor Type	BLDC
Rated DC Power	300W
Coolant Temperature Range	-40℃ / +85℃
Ambient Temperature Range	-40℃ / +70℃
Storage Temperature	-40℃ / +70℃
Weight	<2Kg
Noise (Rated working point, 0.5m)	Less than 55dB(A)
IP rating	IP67, IP6K9K
EMC	EN55022 Class B
Safety	CE

Copyright Johnson Electric Confidential

2.3 eModule Performance

The eModule performance should be as follows with 55% ethylene glycol solution.

Item	Work condition	Voltage	Ambient Temp.	Coolant Temp.	Pressure	Flow	Power in
Unit		V	℃	℃	Kpa	LPM	W
	Continuous	12	25	40	⩾130	45	⩽300

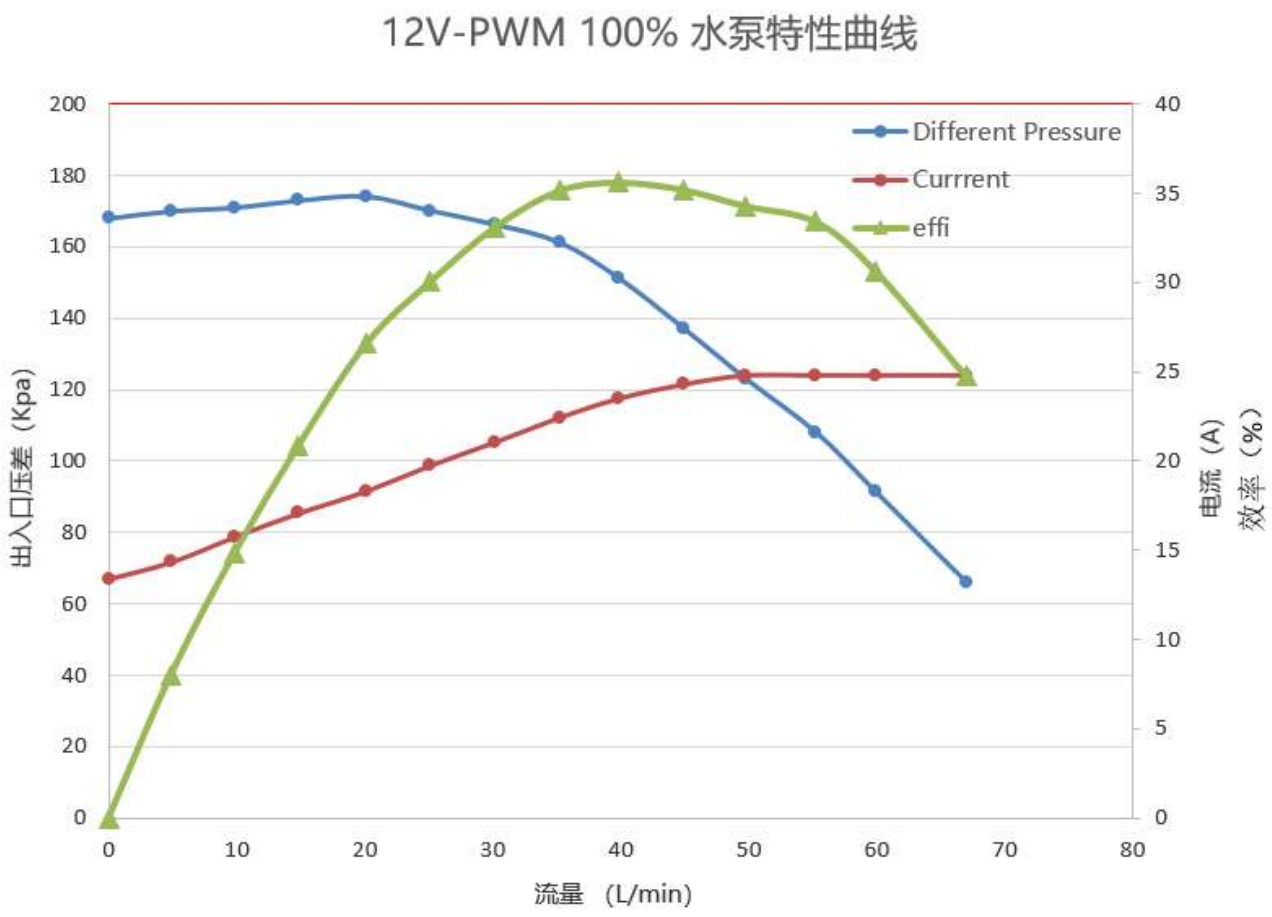

Confidentiality Notice

This document is confidential and contains proprietary information and intellectual property of Johnson Electric. Neither this document nor any of the information contained herein may be reproduced or disclosed without the written permission of Johnson Electric

3 eModule Installation Interface

3.1 Mechanical Connection

eMoudle inlet and outlet port are used to connect customer hydraulic circuit. Wire harness is used to connect to customer electrical system. 3 connect pins are used for customer assembly. In general, the pump orientation is highly recommended that the center line of outlet port is at least 0 degree above the horizontal plane passing through the center of the pump impeller.

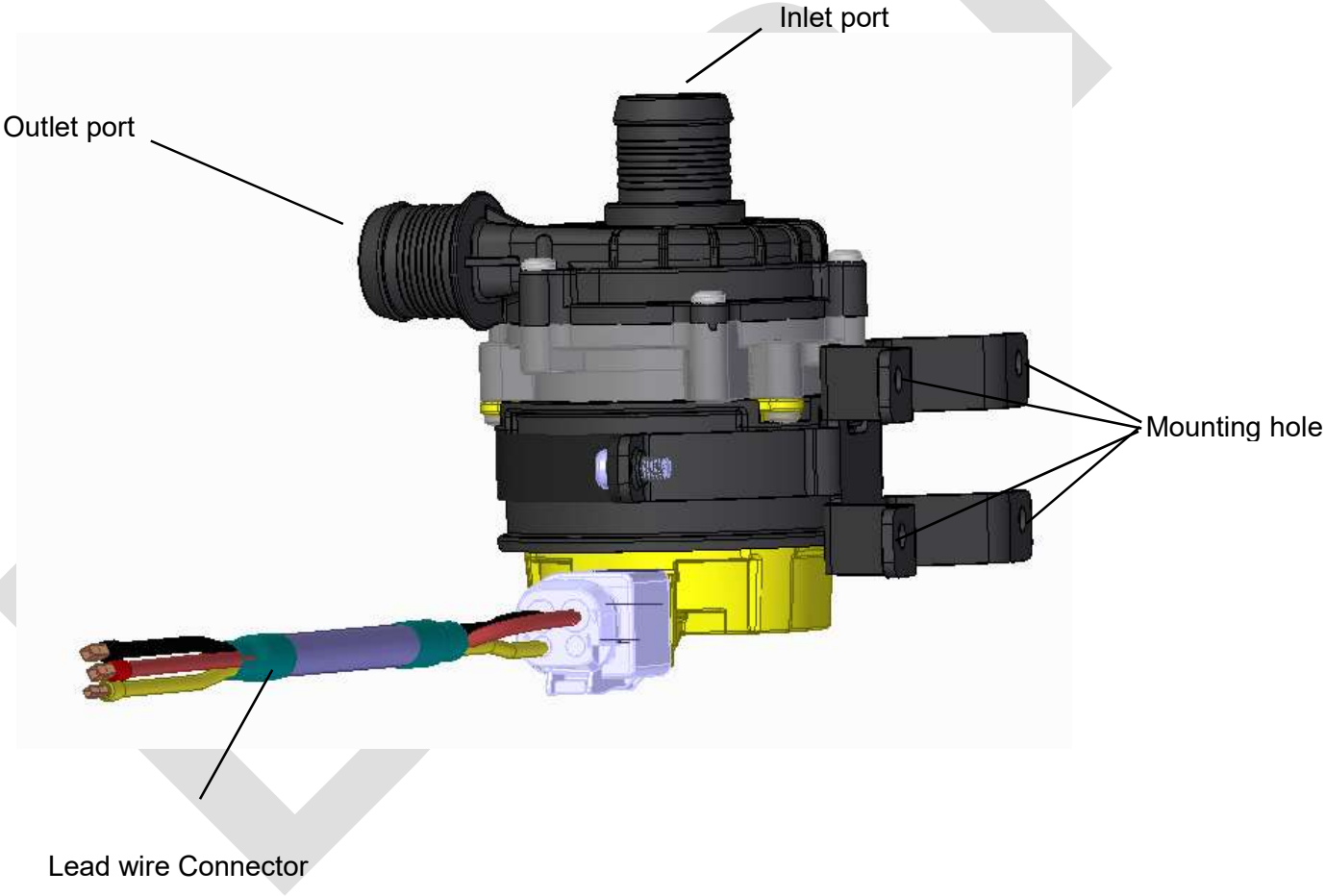

Copyright Johnson Electric Confidential

3.2 Electrical Connection

The eModule I/O interface is a 3-pin wire harness to connect. The detailed pin of harness definition is shown as follows.

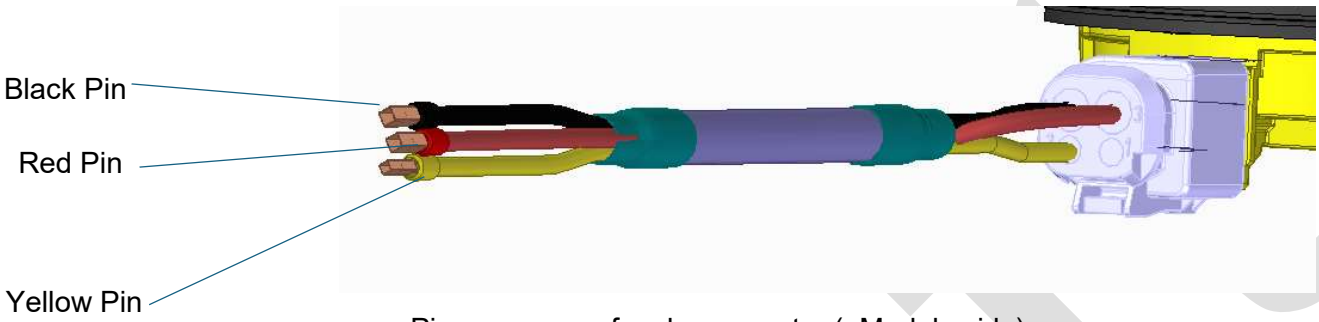

Pin sequence of male connector (eModule side)

Pin.	Signal Name	IO Type	Description	Current rating
Yellow Pin	Signal	Vsp	PMW	--
Red Pin	Power +	Power	Power +	<30A
Black Pin	Power -	Power	Power -	<30A

4 Product Specification

4.1 Electrical Parameters

- Voltage range
  - The normal battery voltage range shall be 9V< V <16V. The rated voltage is 12V.
- Reverse Protection
  - The eModule shall have reverse polarity protection function for 10 minute when the reverse voltage up to -16V.

Draft

Copyright Johnson Electric Confidential

4.2 Software Specification

The Controller receives the command from the master control unit.

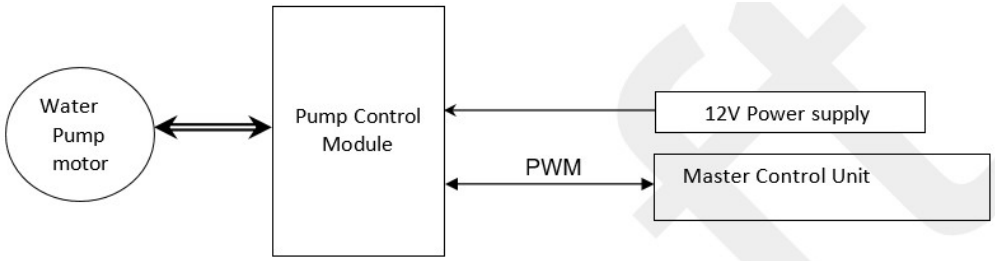

4.2.1 Speed Control

The speed VS PWM as below.

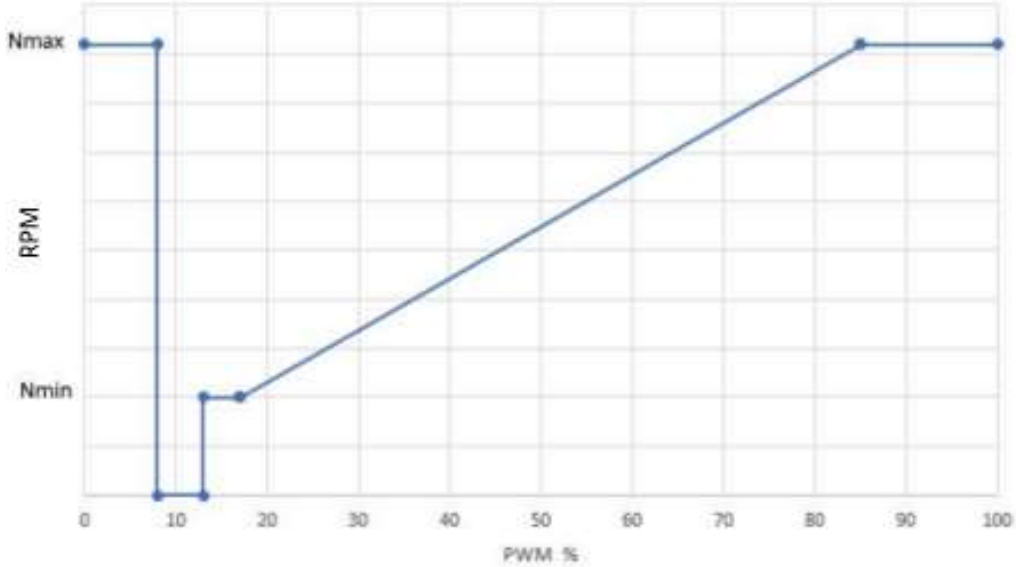

0% ≤D<8% n=Nmax, 8% ≤D<13% n=0

13% ≤D<17% n=Nmin 17% ≤D<85% n=Nmin~Nmax

85% ≤D<95% n=Nmax. 95% ≤D<100% no use

From 17% to 85%, the speed increase linearly

Copyright Johnson Electric Confidential

4.2.2 Derating Mode

The e-Module shall enter Derating mode (60%) if the temperature of the control board exceeds 115 ℃

4.2.3 Error Report

The failure which blocks the e-Module to work normally including dry run, over temperature, stall/over current.

Status ID	Feedback status	Error code
1	Dry run	PWM 1s high level, 1s low level
2	Stall/over current	PWM 1s high level, 1.5s low level
3	Over temperature	PWM 1s high level, 2s low level
4	Normal operation	PWM 4.5s high level, 0.5s low level
5	Over/Under voltage	PWM continual high level

Status feedback priority is according to the status ID. 1 stands for the highest priority.

If more than 1 status, feedback the higher priority status.

Copyright Johnson Electric Confidential

Confidentiality Notice

This document is confidential and contains proprietary information and intellectual property of Johnson Electric. Neither this document nor any of the information contained herein may be reproduced or disclosed without the written permission of Johnson Electric

4.3 Controller Interface

4.3.1 PWM Circuit

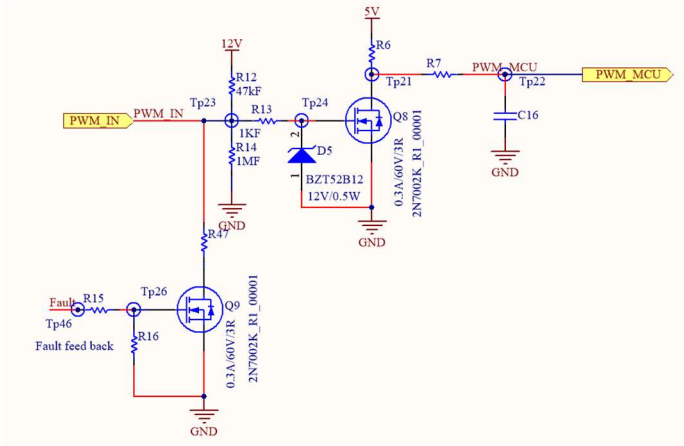

a) The frequency range of PWM signals is 600HZ to 3KHZ. The typical frequency 1KHZ

b) The high level range of PWM signals is 2.8V to 15V, and the low level range is -0.8V to 0.4V

Copyright Johnson Electric Confidential

Confidentiality Notice

This document is confidential and contains proprietary information and intellectual property of Johnson Electric. Neither this document nor any of the information contained herein may be reproduced or disclosed without the written permission of Johnson Electric

5. Validation Items

5.1 Performance Test

- Normal performance test
- Performance test under extreme low voltage
- Noise and vibration test
- Dimension check

5.2 Structure and leakage test

- Vacuum withstand test
- Chamber Leakage test
- Pressure cycle test
- IP test

5.3 Durability Test

- High temperature durability test
- Low temperature durability test
- Thermal cycle test
- High temperature and high humidity test

5.4 Mechanical Test

- Mechanical Vibration& shock test
- Operation vibration & shock test

5.5 Environmental Test

- Salt-spray test
- High temperature storage and work test
- Low temperature storage and work test

Draft

Copyright Johnson Electric Confidential

Confidentiality Notice

This document is confidential and contains proprietary information and intellectual property of Johnson Electric. Neither this document nor any of the information contained herein may be reproduced or disclosed without the written permission of Johnson Electric

- Contamination mixing running test

5.6 EMC Test And Safty test

5.6.1 ESD and EMC test

5.6.2 Insulation test

5.7 Electrical Related Test

5.7.1 Start voltage and current test

5.7.2 Speed stable time test

5.7.3 Speed vs PWN curve test

5.7.4 Power Revered test

5.7.5 PWM voltage level &frequency test

5.7.6 PWM signal quality test

5.7.7 Pump stall test

5.7.8 Pump dry run test

----------The end----------

Copyright Johnson Electric Confidential